Queen Mary
University of London

EBU5376
Digital Signal Processing

Week 2 – Tutorial 2 Student version

Module Organizer: Dr Yixuan Zou yixuan.zou@qmul.ac.uk

Discrete Fourier Transform

DTFT: $X(\omega) = \sum_{-\infty}^{\infty} x[t]e^{-j\omega t}$

- By obtaining N samples in time, the expression is simplified to a finite summation, known as the discrete Fourier transform (DFT):

$$X[k] = \sum_{n=0}^{N-1} x[n]e^{-\frac{j2\pi kn}{N}}, \qquad k = 0, \dots, N-1$$

Magnitude of the kth frequency

Value of the nth sample

- The inverse DFT (IDFT) is defined as

$$x[n] = \frac{1}{N}\sum_{k=0}^{N-1} X[k]e^{\frac{j2\pi kn}{N}}, \qquad n = 0, \dots, N-1$$

- It is usually assumed that the number of frequency components is equal to the number of time-domain samples, i.e., N

Discrete Fourier Transform

- Simplified DFT formulation based on twiddle factor $W_N^{kn} = e^{-\frac{j2\pi kn}{N}}$

$$X[k] = \sum_{n=0}^{N-1} x[n] e^{-\frac{j2\pi kn}{N}} \quad \overset{DFT}{\longleftrightarrow} \quad x[n] = \frac{1}{N}\sum_{k=0}^{N-1} X[k] e^{\frac{j2\pi kn}{N}}$$

$$W_N^{kn} = e^{-\frac{j2\pi kn}{N}}$$

$$X[k] = \sum_{n=0}^{N-1} x[n] W_N^{kn} \quad \overset{DFT}{\longleftrightarrow} \quad x[n] = \frac{1}{N}\sum_{k=0}^{N-1} X[k] W_N^{-kn}$$

- The twiddle factor W_N^{kn} has three parameters: 1) number of samples N; 2) Index of time-domain sample n; 3) index of frequency component k

Discrete Fourier Transform

$$X[k] = \sum_{n=0}^{N-1} x[n] W_N^{kn} \quad \overset{DFT}{\longleftrightarrow} \quad x[n] = \frac{1}{N} \sum_{k=0}^{N-1} X[k] W_N^{-kn}$$

- Some notes on DFT
  - DFT based on N samples is known as an N-point DFT
  - N is the number of samples we take in the time domain
  - N is also the number of non-zero outputs we can get in the frequency domain
  - So, both n and k take values in the range 0,…,N-1
  - Remember, $e^{-\frac{j2\pi kn}{N}} = (\cos\frac{2\pi kn}{N} - j\sin\frac{2\pi kn}{N})$

Discrete Fourier Transform

$$X[k] = \sum_{n=0}^{N-1} x[n] W_N^{kn} \quad \overset{DFT}{\longleftrightarrow} \quad x[n] = \frac{1}{N} \sum_{k=0}^{N-1} X[k] W_N^{-kn}$$

- The kth DFT coefficient $X[k]$ indicates the amplitude of the kth frequency
- The kth frequency in a N-point DFT is $\frac{k}{N} f_s$ Hz ($= \frac{k}{N} 2\pi f_s$ radians), where f_s is the sampling frequency used to obtain the N time-domain samples.

Question 1a

Find the 4-point DFT of the 4-point input sequence:

$$R_4[n] = [1, 2, 3, 4]$$

Question 1b

For the DFT of the 4-point input sequence:

$$R_4[n] = [1, 2, 3, 4]$$

What is the amplitude of each of the four output frequencies $X_4[0]$, $X_4[1]$, $X_4[2]$, $X_4[3]$?

Question 1c

For the DFT of the 4-point input sequence:

$$R_4[n] = [1, 2, 3, 4],$$

if the sampling frequency is 1000 samples/second, what are the frequencies of each of the four output frequencies?

Question 2

An input sequence s[n] = [2, 3, 1, 4] is sampled at 500 samples/second. Use 4-point DFT to find the frequency of the largest amplitude in this signal.

Question 3

- What is the difference between Decimation-in-Time and Decimation-in-Frequency

(a) According to input/output order

(b) According to time taken to do the computation

Question 4

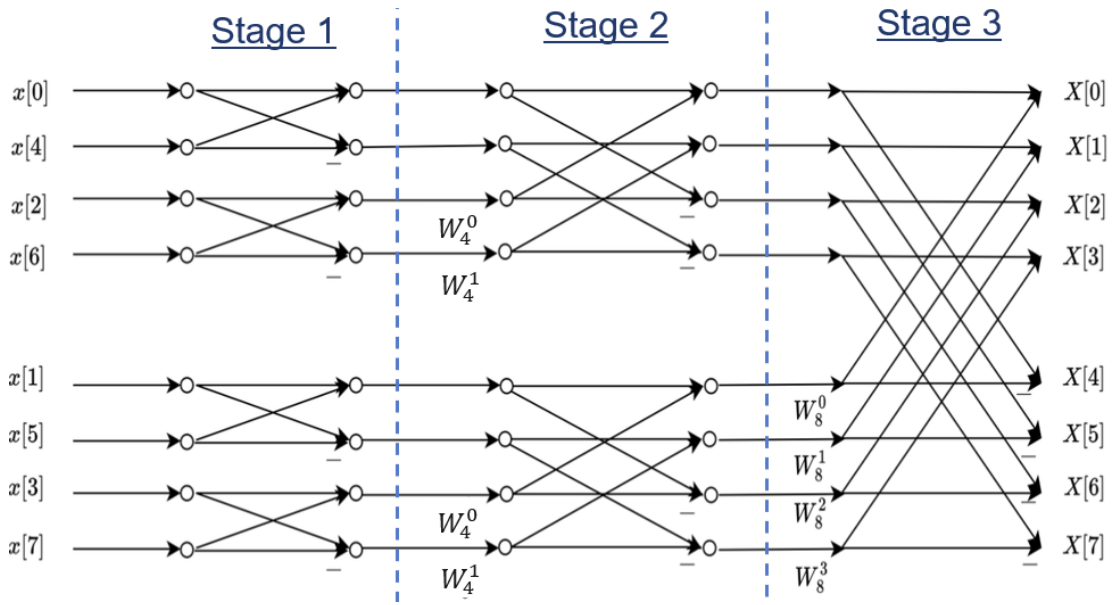

On this diagram of an 8 point DFT what changes must be made to x[5] to get it to X[7].

Question 5

Explain what is meant by “bit reversal”.

Showing all your working, illustrate this FFT structure using the following 8-point sequence: $s[n] = [-4, 7, -2, 6, 1, 9, -7, 3]$

Question 6

Using the given butterfly diagram, visualize the 4-point decimation in frequency (DIF)-FFT when applied to the input $x[n] = [1, 0, -2, 3]$

Butterfly diagram:

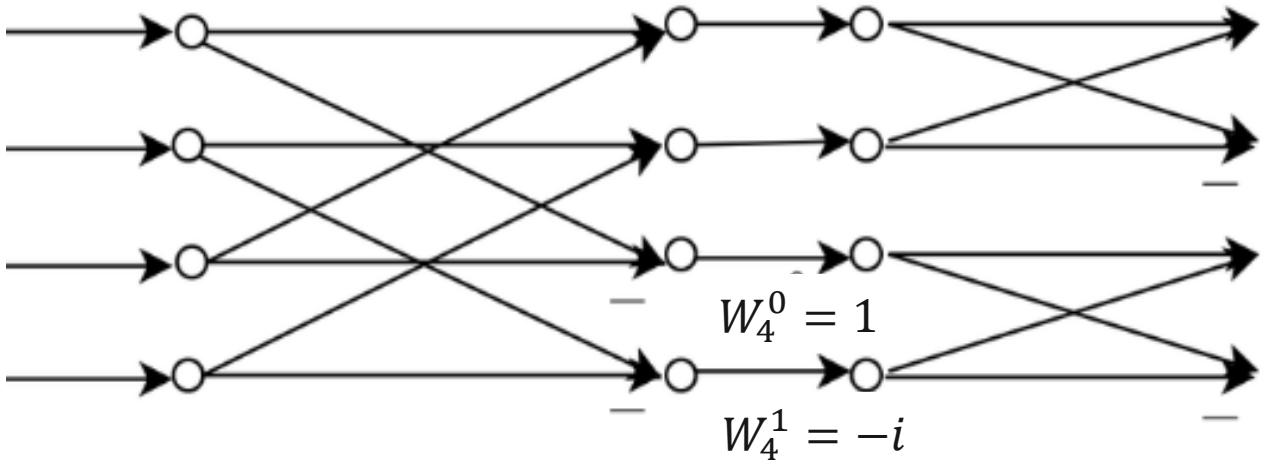

Question 7

Using the given butterfly diagram, visualize the 8-point decimation in time (DIT)-FFT when applied to the input $x[n] = [1, 0, 1, 1, 0, -1, 1, -1]$

Butterfly diagram:

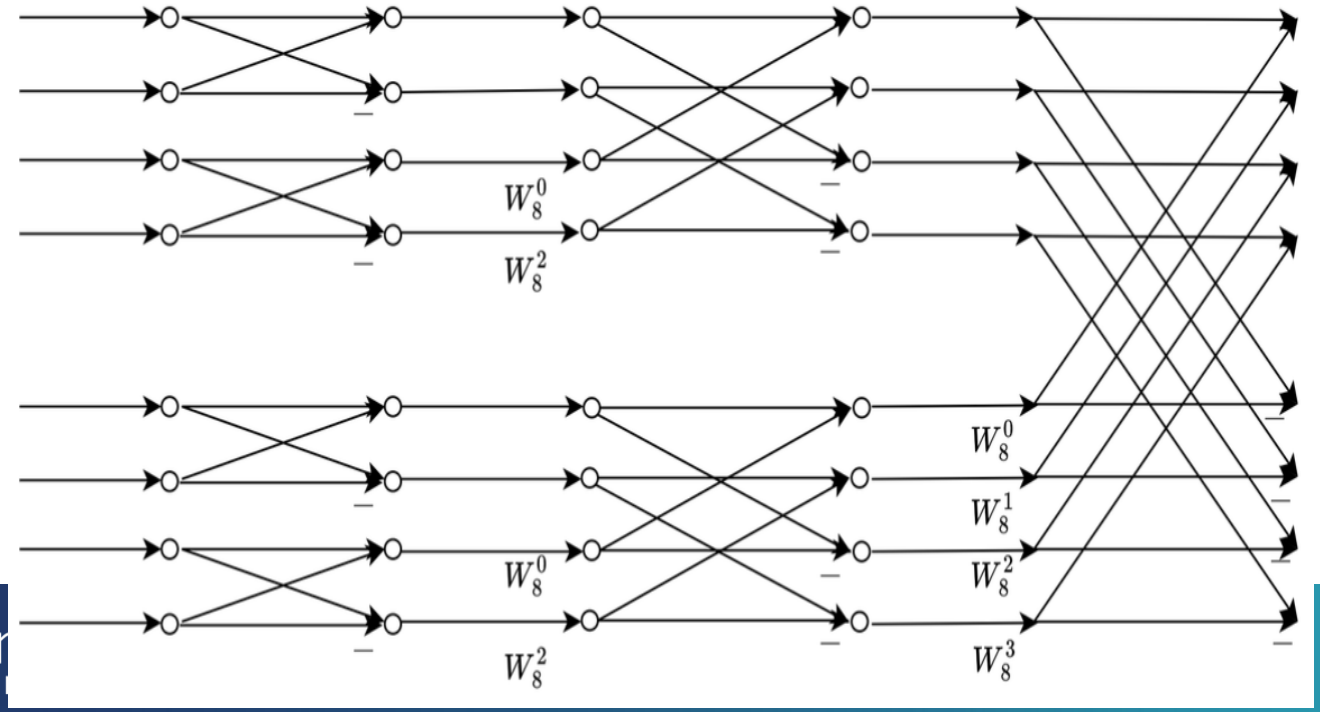

Queen Mary
University of London